Chapter 4 Installing Optional Components

4.1 Installation Precautions

Before you install any system component, we recommend that you read the following sections. These sections contain important ESD precautions, pre- and post-installation instructions.

4.1.1 ESD Precautions

Electrostatic discharge (ESD) can damage your processor, disk drives, expansion boards, and other components. Always observe the following precautions before you install a system component:

1. Do not remove a component from its protective packaging until you are ready to install it.

2. Wear a wrist grounding strap and attach it to a metal part of the system unit before handling components. If a wrist strap is not available, maintain contact with the system unit throughout any procedure requiring ESD protection.

4.1.2 Preinstallation Instructions

Always observe the following before you install a system component:

1. Turn off the system power and all the peripherals connected to the unit before opening it. Read section 1.5 for information on how to properly turn off the system.

   Make sure that the system is unplugged.

2. Open the system according to the instructions in the housing installation manual.

3. Follow the ESD precautions in section 4.1.1 before handling a system component.

4. Remove any expansion boards or peripherals that block access to the DIMM sockets or CPU socket.

5. See the following sections for specific instructions on the component you wish to install.

   Do not attempt the procedures described in the following sections unless you are a qualified service technician.

4.1.3 Post-installation Instructions

Observe the following after installing a system component:

1. See to it that the components are installed according to the step-by-step instructions in their respective sections.

2. Unplug the system unit.

3. Make sure you have set all the required jumpers. See section 2.3.2 for the correct jumper settings or refer to the jumper setting label pasted inside the system cover.

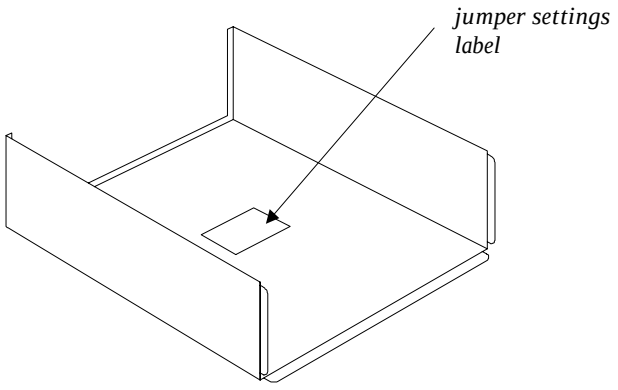

Figure 4-1 Jumper Setting Label Location

4. Replace any expansion boards or peripherals that you removed earlier.

5. Replace the system cover.

6. Connect the necessary cables and turn on the system.

4.2 Removing and Replacing the Housing Cover

Before you proceed, make sure that you have turned off the system and all peripherals connected to it. Read section 4.1.2 for preinstallation instructions.

This section tells you how to open the housing cover when you need to install additional components inside the system unit.

4.2.1 Removing the Housing Cover

1. Turn off power to the system unit and unplug all cables.

2. Place the system unit on a flat, steady surface.

3. Remove the three screws from the rear panel. Set the screws aside; you will need them when replacing the housing cover.

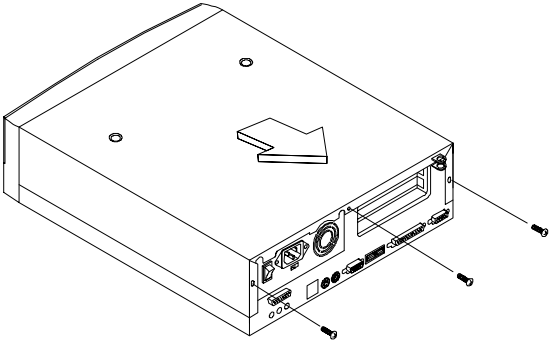

Figure 4-2 Removing the Screws

4. Pull the housing cover slightly backward as indicated in Figure 4-3.

5. Lift the housing cover upward and remove it from the chassis.

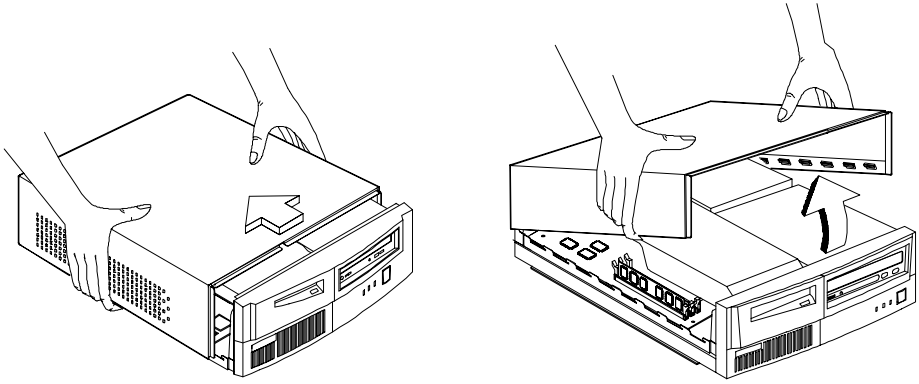

Figure 4-3 Removing the Housing Cover

4.2.2 Replacing the Housing Cover

1. Replace the housing cover as shown in Figure 4-4.

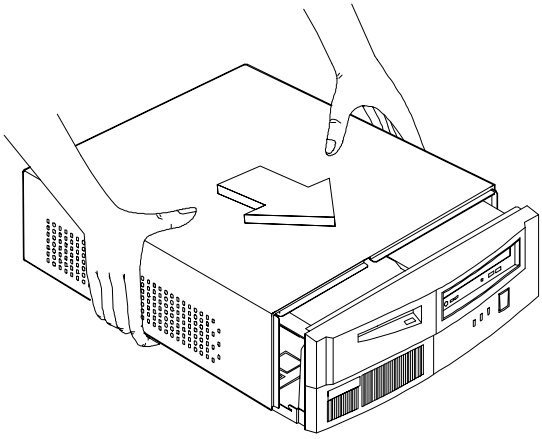

Figure 4-4 Replacing the Housing Cover

2. Secure the housing cover with the necessary screws.

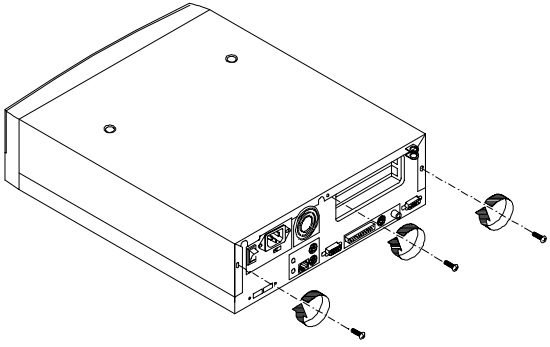

Figure 4-5 Securing the Screws

4.3 Disassembling and Reassembling the System

When upgrading, you may need to disassemble your system in order to access the system board and other components inside the system.

To disassemble the system:

1. The metal cover inside the housing gives additional support to the housing's structure. To remove the metal cover, remove the two screws that attach the metal bracket to the riser card. Insert two fingers into the hole and gently draw it back as you lift it up.

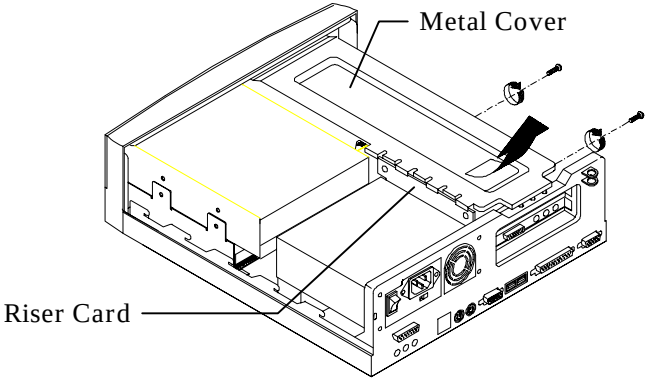

Figure 4-6 Detaching the Metal Cover

2. Disconnect the drive cables then pull out the disk frame holding the CD-ROM drive, hard drive, and the 3.5-inch diskette drive.

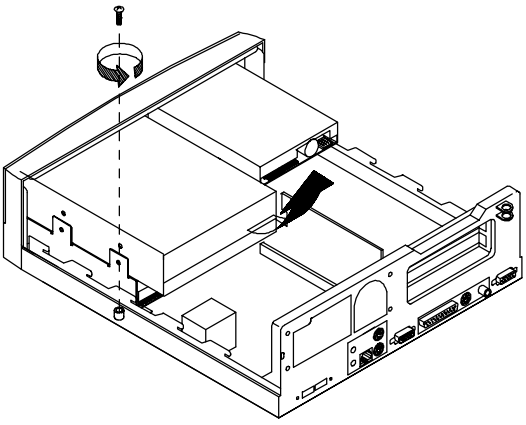

Figure 4-7 Removing the Drive Frame with CD-ROM, Hard Disk, and 3.5-inch Diskette Drives

3. When the drives have been removed, you can now access the system board and the riser card.

To reassemble the system:

To reassemble the system, simply reverse the procedure. However, before you reassemble your system, make sure that you have installed all necessary components and connected the cables.

4.4 Replacing the Hard Disk Drive

1. Detach the hard disk drive bay from the disk drive metal frame by removing the screw as shown below.

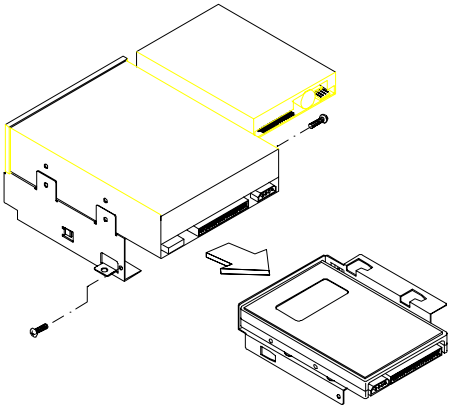

Figure 4-8 Removing the Hard Disk Drive

2. Remove the necessary screws to detach the hard disk drive from the bracket.

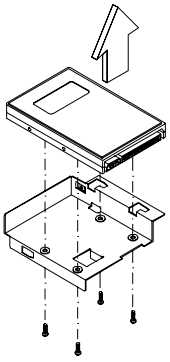

Figure 4-9 Removing a Hard Disk Drive from the Bracket

3. Attach the new hard disk drive to the racket with the necessary screws.

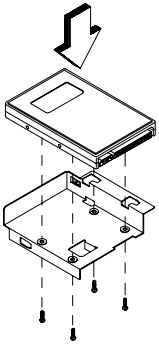

Figure 4-10 Attaching the Hard Disk Drive Bay to the Metal Frame

3. Reattach the hard disk drive bay to the disk drive metal frame.

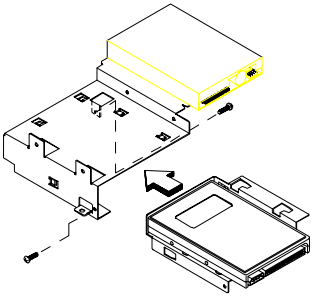

Figure 4-11 Attaching a Hard Disk Drive to the Bracket

4. Replace the metal frame to its original position in the system and reassemble the system.

4.5 Installing and Removing Expansion Boards

4.5.1 Installing a PCI Card

To install a PCI card:

1. Turn off and unplug the system.
2. Locate the riser card.
3. Locate an empty PCI slot on the slot board.
4. Remove the bracket on the housing opposite to the empty PCI slot.
5. Insert a PCI card into the slot. Make sure that the card is properly seated.

6. Secure the card to the housing with a screw.

When you turn on the system, BIOS automatically detects and assigns resources to the PCI devices.

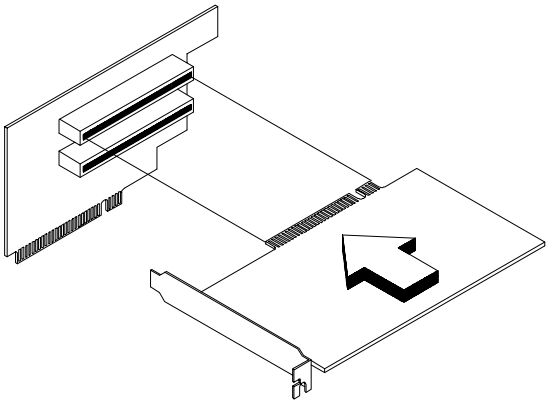

Figure 4-12 Installing a PCI Card

4.6 Installing Additional Memory

The system memory is upgradable to a maximum of 256 MB via two 168-pin DIMM sockets on board. These DIMM sockets accept PC-66 compliant DIMMs with 16-, 32-, 64-, and 128-MB capacities. See Figure 2-1 for the location of the DIMM sockets. Section 4.6.1 tells how to install DIMMs.

Table 4-1 lists possible memory configurations.

Table 4-1 Memory Configurations

DIMM1	DIMM2	Total Memory
16 MB		16 MB
32 MB		32 MB
64 MB		64 MB
128 MB		128 MB
	16 MB	16 MB
	32 MB	32 MB
	64 MB	64 MB
	128 MB	128 MB
16 MB	16 MB	32 MB
16 MB	32 MB	48 MB
16 MB	64 MB	80 MB
16 MB	128 MB	144 MB
32 MB	16 MB	48 MB
32 MB	32 MB	64 MB
32 MB	64 MB	96 MB
32 MB	128 MB	160 MB
64 MB	16 MB	80 MB
64 MB	32 MB	96 MB
64 MB	64 MB	128 MB
64 MB	128 MB	192 MB
128 MB	16 MB	144 MB
128 MB	32 MB	160 MB
128 MB	64 MB	192 MB
128 MB	128 MB	256 MB

4.6.1 Installing a DIMM

1. Open the clips on the socket.
2. Align the DIMM with the socket.
3. Press the DIMM into the socket until the clips lock into the DIMM.

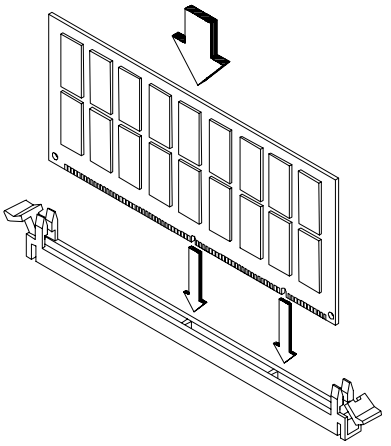

Figure 4-13 Installing a DIMM

The DIMM socket is slotted to ensure proper installation. If you insert a DIMM but it does not fit easily into the socket, you may have inserted it incorrectly. Turn the DIMM around and try to insert it again.

4.6.2 Removing a DIMM

1. Press the holding clips on both sides of the socket outward to release the DIMM.

2. Gently pull the DIMM out of the socket.

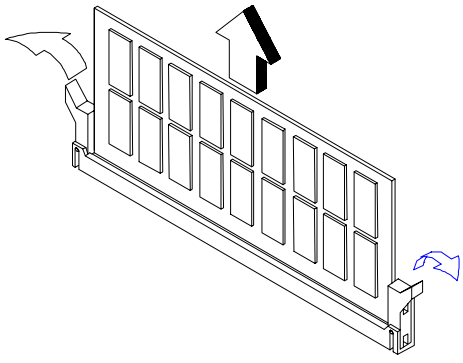

Figure 4-14 Removing a DIMM

4.6.3 Reconfiguring the System

The system automatically detects the amount of memory installed. Run Setup to view the new value for total system memory and make a note of it.

4.7 Upgrading the CPU

The board supports a Pentium II processor or a Celeron processor. Both processors come in a new enclosed packaging technology called S.E.C. (Single-Edge Contact) cartridge. The only difference between the two is that the

Pentium II processor comes with a 256-KB or 512-KB built-in second-level cache, while the Celeron processor comes only with an internal cache. Both are capable of increasing the performance of 32-bit software and multimedia applications.

4.7.1 Removing the Pentium II CPU

Observe the ESD precautions when installing or removing a system component. See section 4.1.1.

Before you can replace or upgrade your processor, you need to remove the previously installed processor on the system board.

Follow these steps to remove the Pentium II CPU:

1. Disconnect the 3-pin and 2-pin heatsink fan cables from the system board.

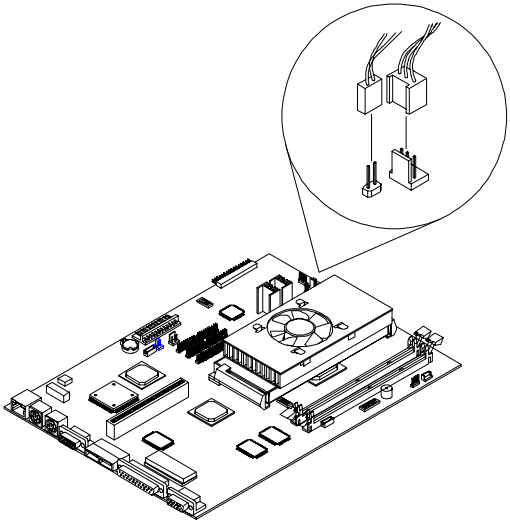

Figure 4-15 Disconnecting the heatsink cable from the system board

To insure proper installation, remove all DIMMs from their sockets before installing or removing the CPU. See section 4.6.2 for instructions on removing a DIMM.

2. Press the latches on both sides of the processor to release it from the retention mechanism. You will hear a click sound once the latch is released.

3. Pull out and lift up the processor to detach it from the CPU connector.

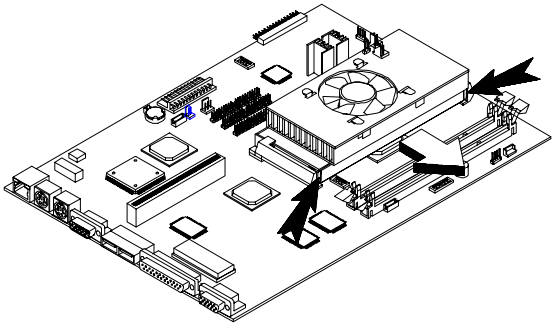

Figure 4-16 Pressing the Latches and Detaching the CPU

4.7.2 Installing a Pentium II CPU

Observe the ESD precautions when installing or removing a system component. See section 4.1.1.

Before you proceed, make sure that there is no processor installed in the CPU connector.

Follow these steps to install a Pentium II CPU:

1. Remove the processor card from its protective packaging. Make sure that the latches on the sides of the module are not pressed.

2. Insert the clip ends into the holes on the processor as shown below.

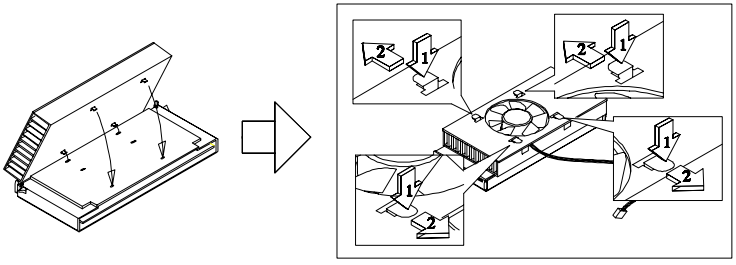

Figure 4-17 Inserting the Clip Ends into the Processor Holes

3. Lower the processor into to the CPU socket and gently push it in until the golden fingers completely fit into the connector and the latches on the sides lock the processor into place.

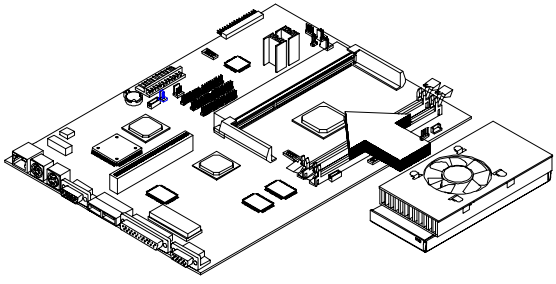

Figure 4-18 Installing the Pentium II CPU

To insure proper installation, remove any DIMM from their sockets before installing or removing the CPU. See section 4.6.2 for instructions on removing a DIMM.

4. Connect the 3-pin cable to JPX1 and the 2-pin cable to JP8 on the system board.

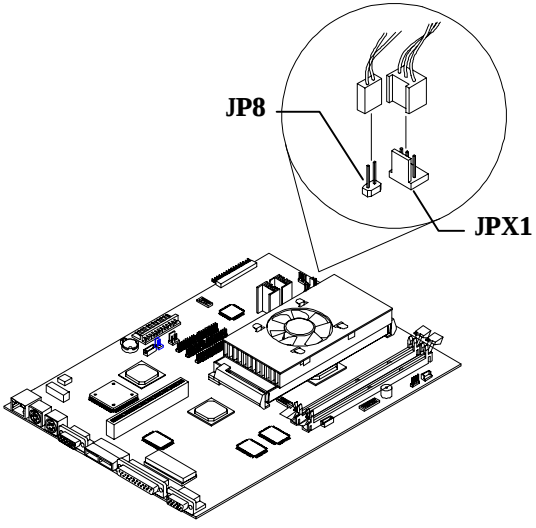

Figure 4-19 Connecting the heatsink cables to the system board

The heatsink becomes very hot when the system is on. NEVER touch the heatsink with any metal or with your hands.

4.5.3 Installing the Celeron CPU

Observe the ESD precautions when installing or removing a system component. See section 4.1.1.

Before you proceed, make sure that there is no processor installed in the CPU connector.

Follow these steps to install a Celeron processor:

1. Remove the Celeron processor from its protective packaging.

2. Lower the processor into the CPU socket and gently push it in until the golden fingers completely fit into the connector.

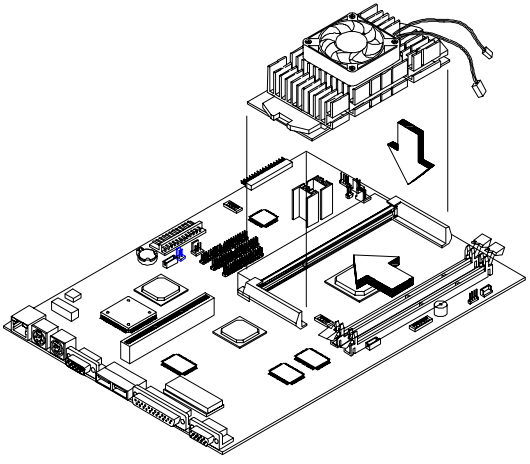

Figure 4-20 Installing the Celeron Processor

3. Connect the 3-pin cable to JPX1 and the 2-pin cable to JP8 on the system board.

4. Snap both retention clips into place.

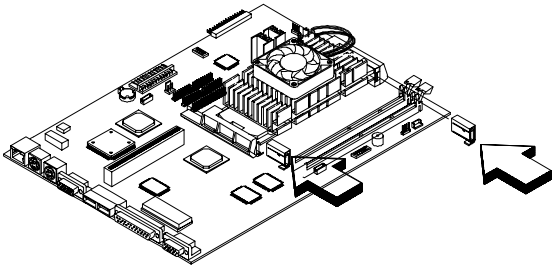

Figure 4-21 Installing the Retention Module

The heatsink becomes very hot when the system is on. NEVER touch the heatsink with any metal or with your hands.